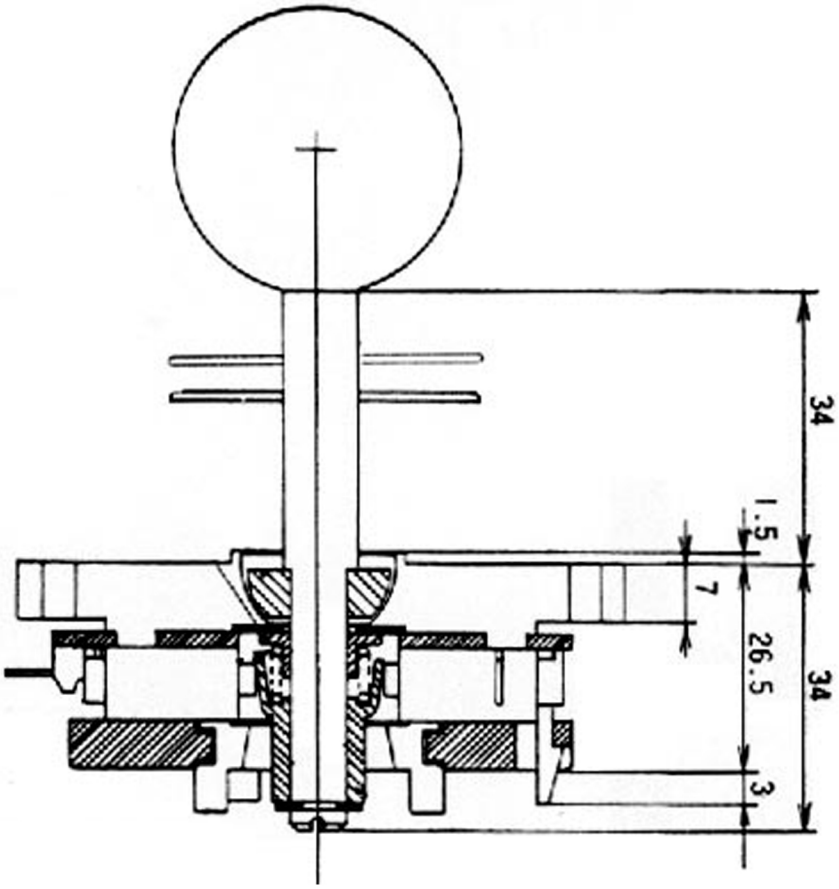
34
1.5
7
26.5
34
3

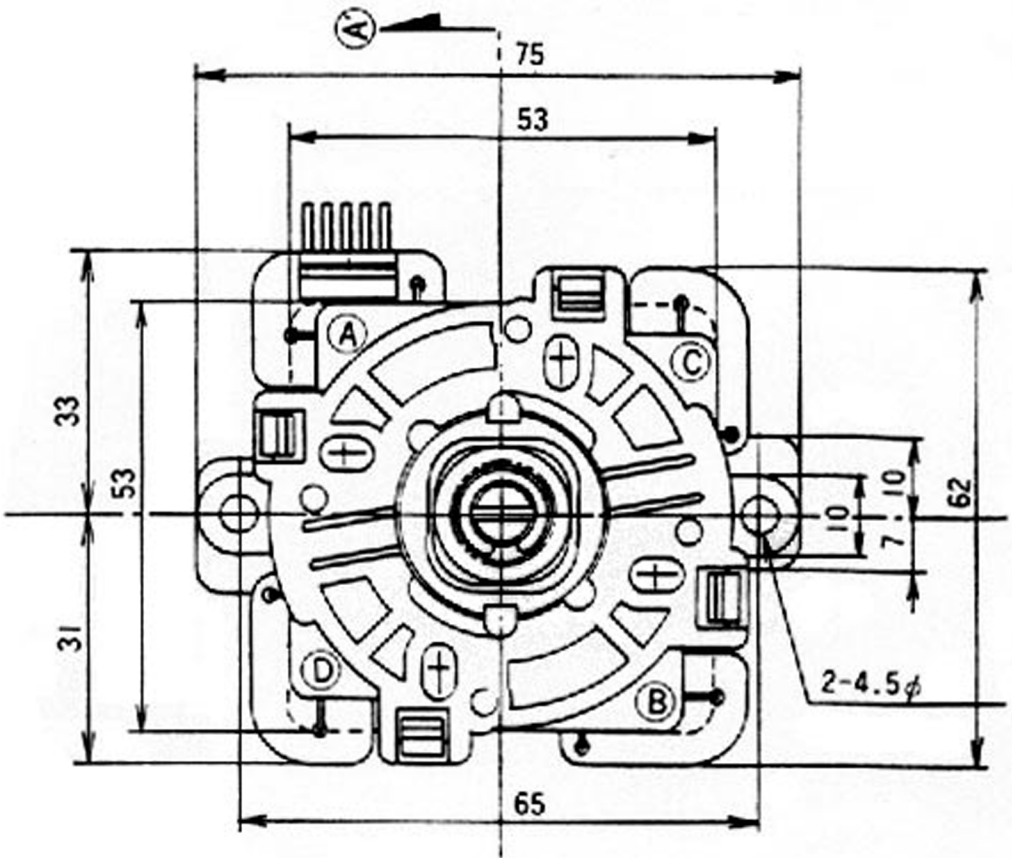
A
75
53
A
C
33
53
31
D
B
10
10
7
29
2-4.5φ
65